❒ Electrical Characteristics

Maximum Ratings

Parameters Description	Unit	Minimum	Typical	Maximum
Operating Temperature Range	°C	-	25	-
Storage Temperature Range	°C	-40	-	85
Maximum DC Voltage	V	-	-	10
Maximum Input Power	dBm	-	-	10
Source Impedance (single ended)(1)	Ω	-	50	-
Load Impedance (single ended)(1)	Ω	-	50	-
Package type & size	F			
Length x Width	mm²	-	34.7 x 12.6	-
Height	mm	-	-	5.05

Electrical Specification

Parameters Description	Unit	Minimum	Typical	Maximum
Center Frequency (Fo)	MHz	-	62.5	-
Insertion Loss at Fo	dB	-	23.7	26.0
Temperature Coefficient	ppm/°C	-	-72	-
Amplitude Ripple Variation within fo ±9.22 MHz	dB_{p-p}	-	0.6	1.0
Group Delay Variation within fo ±9.22 MHz	nsec	-	40	90
Absolute Delay at Fo	µsec	-	2.91	-
Bandwidth at –1.0 dB	MHz	18.90	18.95	-
Bandwidth at –3.0 dB	MHz	-	19.17	-
Bandwidth at –40.0 dB	MHz	-	20.15	20.20
Relative Attenuation:				
Fo ±10.0 MHz	dB	25	27	
Lower Sidelobe	dB	50	52	-
Upper Sidelobe	dB	50	52	-

Notes : (1) With Matching Network (Ref. Testing Environment Circuit as shown below).
Those impedances could be modified with different impedance values and/or structures, if necessary.

❒ Package Dimensions

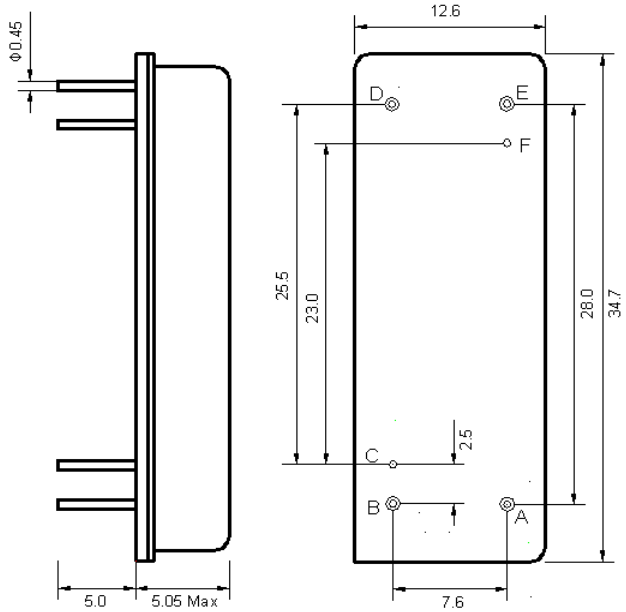

Pin Description	
B, C, D, F	Ground
A	Input
E	Output

❒ Testing Environment

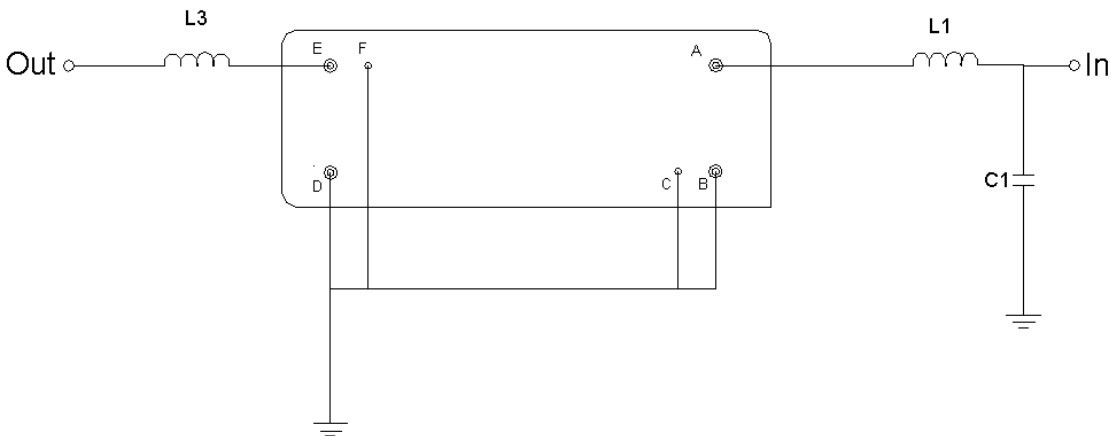

Test Fixture & Values	
Input	L1=220nH , C1=30pF
Output	L2=220nH ,
Source/Load Impedance	50 Ω

❒ Frequency Characteristics

Frequency Response

Bandwidth at –1.0 dB

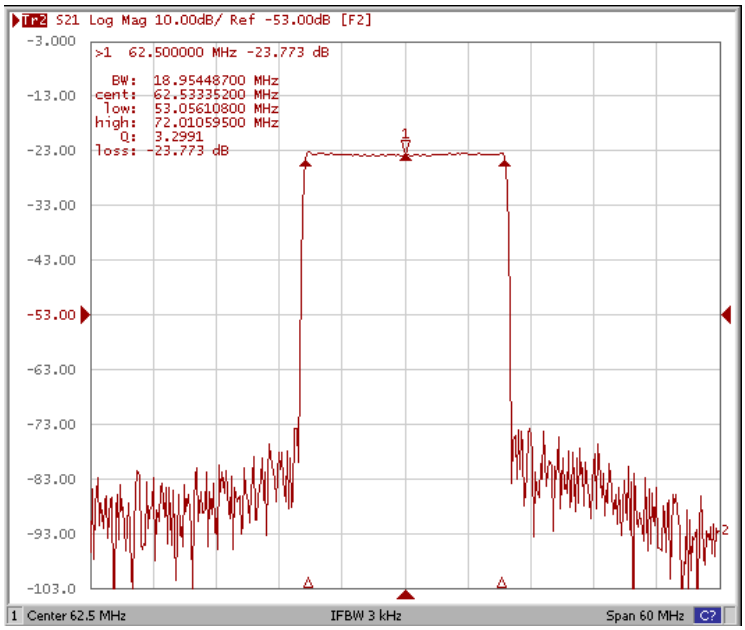

Bandwidth at –3.0 dB

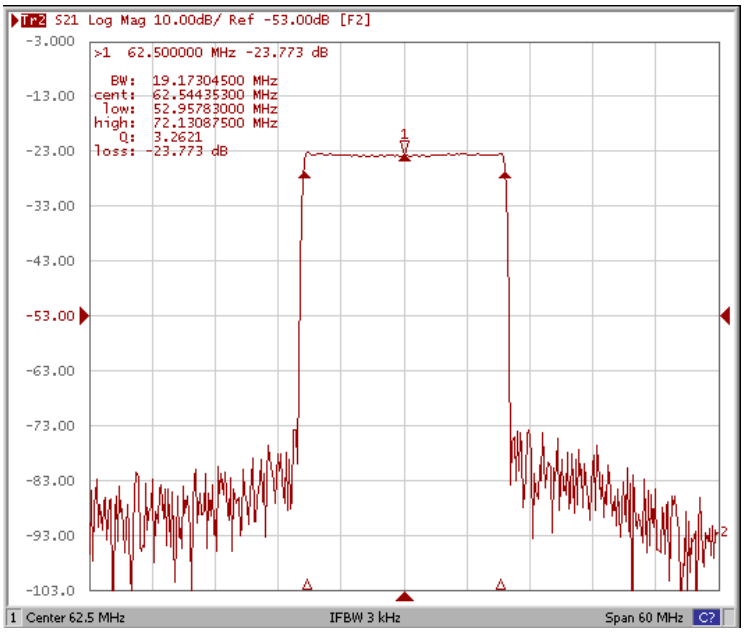

Bandwidth at –40.0 dB

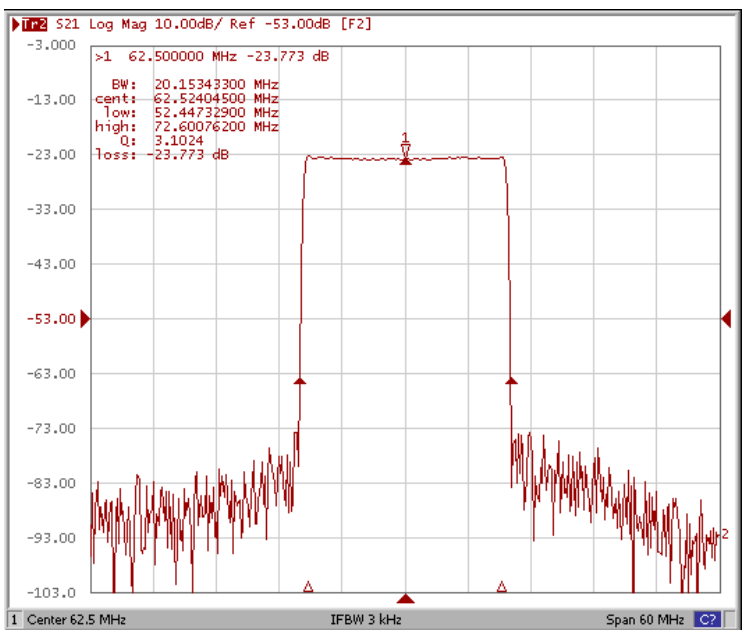

Wide-Band

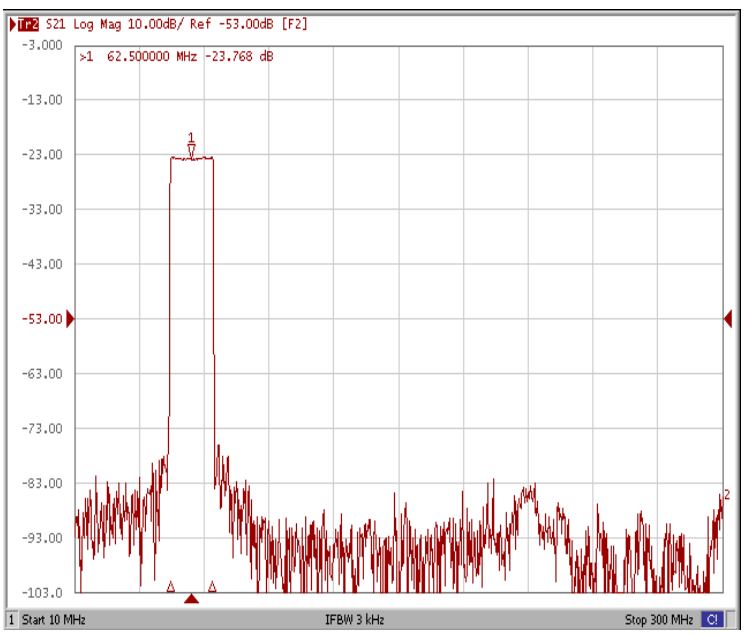

❒ Frequency Characteristics

Frequency Response

Ripple Variation Fo±9.22MHz

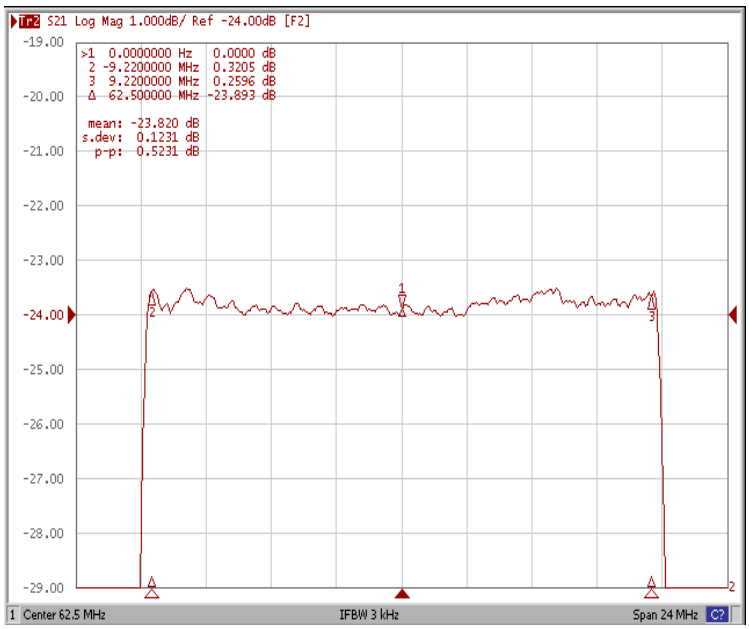

Group Delay Variation Fo±9.22MHz

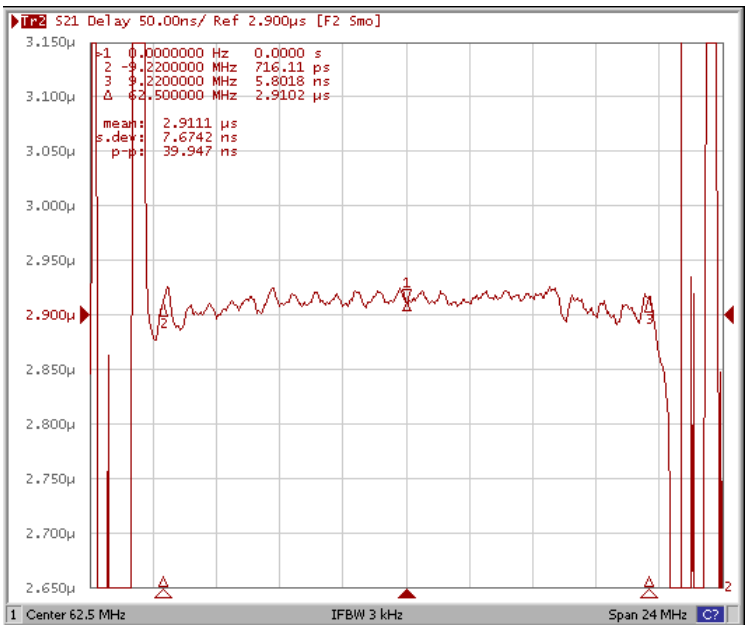

Smith Chart

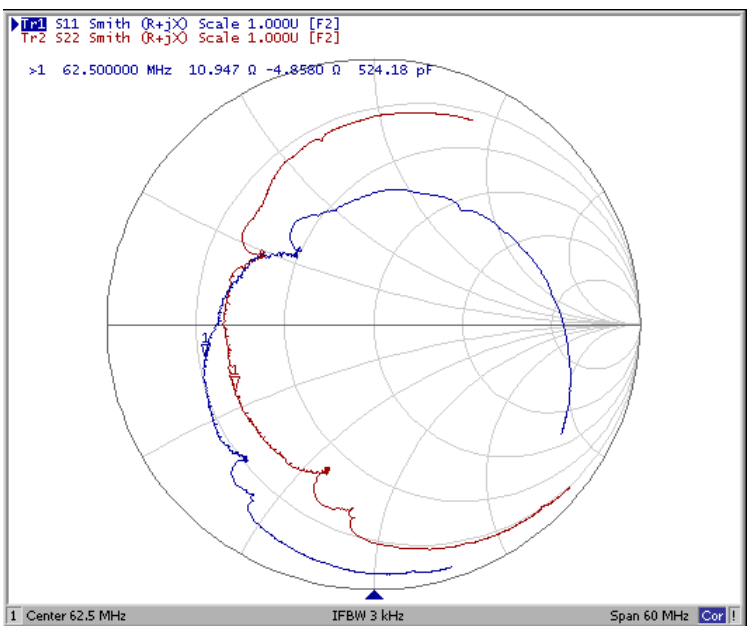

SWR